ITEM NO.	PART NUMBER	DESCRIPTION	QTY.
1	Roof Conyers ASM		1
1.1	Roof Sheet Metal 0.063in	Sheet Metal Roof (1/16)"	2
1.2	Roof Side Sup 6x0.25	Roof Support 6x(1/4)" Beam	2
1.3	Roof Sup Beam 3x3x0.125	Roof Support 3x(1/8)" Beam	22
1.4	Roof Side Sup 6x0.25	Roof Support 6x(1/4)" Beam	4
1.5	Roof Rib 1.5x0.125	Roof Ribbing 43.5"	12
1.6	Roof Rib 1.5x0.125	Roof Ribbing 45"	24
1.7	Roof Lateral Sup 152in 76in	Lateral Support 152x(1/4") OUTER	2
1.8	Roof Lateral Sup 152in 76in	Lateral Support 76inx(1/4") INNER	5
1.9	Gussets Plates and Plugs Var 1	(1/16)" PLATE	4
1.10	Gussets Plates and Plugs Var 1	(1/2)" PLATE	8
1.11	Gussets Plates and Plugs Var 1	(3/8)" PLATE	8
1.12	Gussets Plates and Plugs Var 1	(3/8)" PLATE	4
1.13	Gussets Plates and Plugs Var 1	(1/4)" PLATE	4
1.14	Gussets Plates and Plugs Var 1	(1/4)" PLATE	4
1.15	Roof Concrete Base 6in	Footing: Concrete 5,000[psi]	4
1.15.1	Roof Concrete 24x48 6in Beam	5000[psi] concrete 0.34[m3] : 12[ft3]	1
1.15.2	Roof Rebar ring 1	(1/2)" - 304SS	3
1.15.3	Roof Rebar Vertical 1	(1/2)" - 304SS	1
1.15.4	Roof Buried beam 6in	304SS	1
1.15.5	Roof Mounting Plates 1 2	(3/4)" - 304SS	1
1.15.6	Roof Mounting Plates 1 2	(3/4)" - 304SS	2
1.15.7	Bolt ASM 2.5in 18-8 SS	2.5"-13TPI - 2 WASHERS - 2 NUTS	12
1.15.7.1	92198A722	18-8 Stainless Steel Hex Head Screw Made Outside The U.S.	1
1.15.7.2	92141A033	18-8 Stainless Steel Washer	2
1.15.7.3	91845A310	18-8 Stainless Steel Hex Nut	2
2	CrosBody 2per Decimated		1
2.1	Cross 2per Decimated	CROSS FOR 2% DECIMATED MODEL W/SIGN	1
2.2	Body 2per Decimated	BODY, 2% DECIMATED GEOMETRY	1
2.3	CrossConcrete Base		1
2.3.1	CrossConcrete base 5000psi	Concrete 5[ksi] 0.32[m3], 11.3[ft3]	1
2.3.2	CrossRebar ring 1	2024/6061 AL ROD OR REBAR 1/2"	3
2.3.3	CrossRebar Vertical 1	2024/6061 AL ROD OR REBAR 1/2"	1
2.3.4	CrossBuried beam 1	8"x0.5" AL 6061-T6	1
2.3.5	CrossMounting Plates 1	3/4" PLATE 6061-T6	1
2.3.6	CrossMounting Plates 1	3/4" PLATE 6061-T6	1
2.3.7	CrossMounting Plates 1	3/4" PLATE 6061-T6	1
2.3.8	CrossBolt ASM 3in 6061AL	2.5" MIN AL 0.5-13	12
2.3.8.1	fastenal_0176235	3"x(1/2)"-13	1
2.3.8.2	93286A049	Aluminum Washer	2
2.3.8.3	90670A033	6061 Aluminum Hex Nut	2
2.3.8.4	Shim 0.75x0.875x0.875 AL	6061 AL	1
3	Stone Altar	Altar is on a small slope	1
4	Mary 10a 7per from stl_21	The Miraculous Medal	1

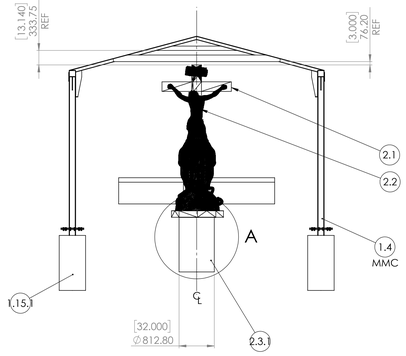

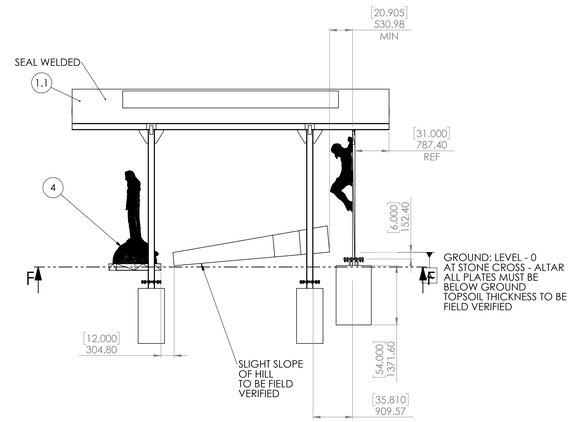

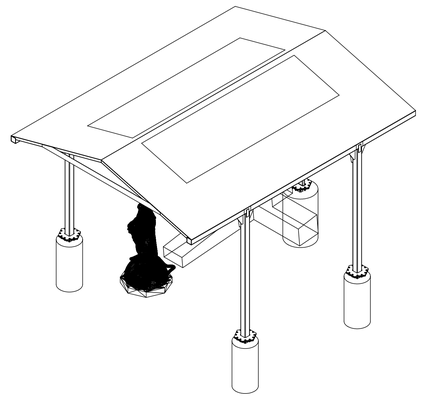

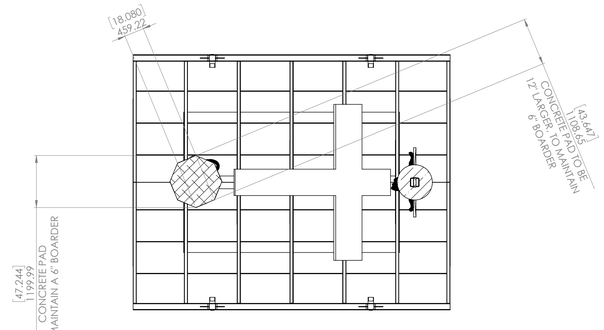

SECTION F-F

SPECIFICATIONS)
(1) ALL WORK SHALL BE COMPLETED/APPLICABLE TO 2024 IBC AND OSHA
(2) ALL WORK SHALL BE COMPLETED/APPLICABLE TO ALL OTHER APPLICABLE CODES
(3) ALL WORK SHALL BE COMPLETED/APPLICABLE TO ALL LOCAL CODES
(4) ALL PERMITS SHALL BE THE RESPONSIBILITY OF THE CONTRACTOR/S
(5) ALL SITE/FIELD MEASURMENTS SHALL BE FIELD VERIFIED PRIOR TO ON-SITE CONSTRUCTION
(6) CONTRACTOR/S SHALL BE RESPONSIBLE FOR MEASURMENT/PLACEMENT
(7) CONTRACTOR/S SHALL BE RESPONSIBLE FOR VERIFICATION OF STRUCTURAL STABILITY/PLACEMENT ON ALL SURFACES/SLOPES
  (1) VERTICAL MEMBERS MUST NOT SLANT
  (2) HORIZONTAL MEMBERS MUST NOT LEAN
(8) CONTRACTOR IS RESPONSIBLE FOR FIT/FINISH
  (1) NO DISJOINTED PARTS OR ASSEMBLIES
  (2) SURFACE ANOMOLIES/DISTORTIONS/DEFECTS
(9) FOR UNFORSEEN/UNEXPECTED SOIL DETRIMATES CONSULT SUPERVISING LEAD AND/OR ENGINEER
(10) UNREGISTERED/UNANTICIPATED EVENTS, STRUCTURAL OR OTHERWISE CONSULT SUPERVISOR
(11) FOUNDATION/S MOUNTING PLATES/FASTENERS MUST BE 2[IN] BELOW THE TOPSOIL/GRAVEL
(12) ROOF VERTICAL SUPPORTING MEMBERS ARE NOT TO EXCEED 12[FT] (3.66[M])

MATERIAL)
(13) ROOF MATERIAL IS 304SS, 18-8SS FOR FASTENERS IS ACCEPTABLE
(14) MATING SURFACES SHALL NOT CONTACT DISIMMILAR METALS
(15) ALUMINUM RODS MAY BE USED IN PLACE OF REBAR, W/R ALUMINUM STRUCTURE/S
(16) MATERIAL OF CAST CROSS & BODY (CORPSE) WAS DESIGNED W/R A383.0-F
(17) CAST MATERIAL WITH Sy (YIELD STRENGTH) OF 22[KSI] OR GREATER IS ACCEPTABLE
(18) ALUMINUM STRUCTURAL STEEL 6061-T6 T651, Sy OF 37[KSI] OR GREATER IS ACCEPTABLE
(19) ROOF: ALL VERTICAL SUPPORTS ARE TO BE LESS THAN 12[FT] (3.66[M]) FROM MOUTING PLATE
(20) CONCRETE:
  (1) FOOTINGS MAY BE SQUARE
  (2) CONCRETE COMPRESSION STRENGTH 3,000[PSI]

SURFACE FINISH)
(21) SURFACE FINISH AS DEFINED BY ANSI B46.1
(22) NO DEFECTS, DEFORMATIONS OR SCRATCHES
(23) VISIBLE PARTS RECIEVE TEXTURE
  (1) VISIBLE SURFACE FINISH ROUGHNESS RA 120[μIN] (3[μM])
  (2) VISIBLE SURFACE FINISH ROUGHNESS RMS 132[μIN] (3.4[μM])
  (3) VISIBLE SURFACE FINISH FOR ROOF/STRUCTURE NASF-M12-P OR NASF-C22-P
  (4) MECHANICAL OR CHEMICAL NON-DIRECTIONAL PER RA & RMS
(24) NON-VISIBLE PARTS, CCAS MANUFACTURED, M10
(25) NO TEXTURE ON CAST PARTS OR ASSEMBLIES, CROSS OF THE CRUCIFIXION
(26) NO TEXTURE ON CAST PARTS OR ASSEMBLIES, MIRACULOUS MEDAL

MATES/WELDS)
(27) WELD MATERIAL IS TO BE COMPATIBLE WITH MATERIALS
(28) Sy (YIELD STRENGTH) OF THE WELD MATERIAL IS TO BE GREATHER THAN THE MATING MATERIALS
(29) WELDS ARE TO BE CONVEX, MINIMUM OF 17% LARGER THAN THICKEST PART/PLATE
(30) ROOF-PANELS ARE SEAL WELDED BOTH SIDES, ITEM 1.1

MISC)
(31) STONE ALTAR IS TO BE REPAIRED
(32) STONE ALTAR IS TO BE A MINIMUM OF 6[IN] (155[MM]), IN THE HORIZONTAL, FROM THE CONCRETE FOUNDATION OF THE CROSS
(33) ALL BOLTS ARE TO BE DOUBLE-NUTTED: 1ST NUT (TO PART) AT 10[LBF-FT], 2ND NUT (TO NUT) AT 15 20[LBF-FT], NO SPACER BETWEEN THE NUTS

STATS/DATA)
(34) DATA IS MASTER
(35) BACKGROUND, DETAILS AND CALCULATIONS ARE LOCATED IN "Architectural Modeling 3 Crosses Rev 20---" (LATEST DATE - WORD/PDF DOCUMENT)
(36) WEIGHT OF THE CROSS OF THE CRUCIFIXION IS 860[LBF] (390[KG) SOLID
(37) VOLUME OF THE CROSS OF THE CRUCIFIXION IS 5.2[FT3] (0.15[M3]) SOLID
(38) WEIGHT OF MOTHER MARY IS LESS THAN 3,600 [LBF] (1,650[KG])
(39) VOLUME OF MOTHER MARY IS LESS THAN 22[FT3] (0.63[M3])
(40) CAST-PARTS MAY CONTAIN CAVITIES
  (1) THE HEAD/NECK/LEGS ARE TO REMAIN SOLID
  (2) THE GLOBE MAY MAINTAIN A 3.5[IN] (90[MM]) SHELL
  (3) MOTHER MARY & CORPSE MUST MAINTAIN A MINIMUM 2.5[IN] (64[MM]) SHELL

(41) CAST MODELS OF THE CROSS OF THE CRUCIFIXION ARE LOCATED IN)
  (1) "Cross Body ASM 1 IGS.7z"
  (2) "Cross Body ASM 1 Part 1 sldprt.zip"
  (3) "Cross Body ASM 1 PLY.zip"
  (4) "Cross Body ASM 1.zip" (SOLIDWORKS INDIVIDUAL SEGMENTS
  (5) "Full ASMCrdBmodel 20.7z" (BLENDER GRAPHICS)
  (6) "Full ASMCrdBmodel 20.zip" (BLENDER GRAPHICS, STL AND OTHER)

(42) CAST MODELS OF THE MOTHER MARY AND GLOBE (THE MIRACULOUS MEDAL) ARE LOCATED IN
  (1) "Mary 10a 7per from stl_21.zip"
  (2) "Mary 11 files.zip" : FOR DETAILED MODEL USE "Mary 11 100per Detail"
(43) THE CAST MODEL OF THE MIRACULOUS MEDAL IS ON A 6[IN] REINFORCED CONCRETE PAD
  (1) (1/2) SS REBAR 12[IN] SEPARATION
  (2) 3,000[PSI] CONCRETE

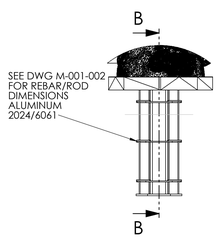

DETAIL A
SCALE 1 : 25

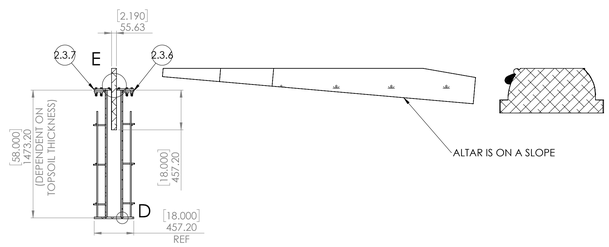

SECTION B-B
SCALE 1 : 25

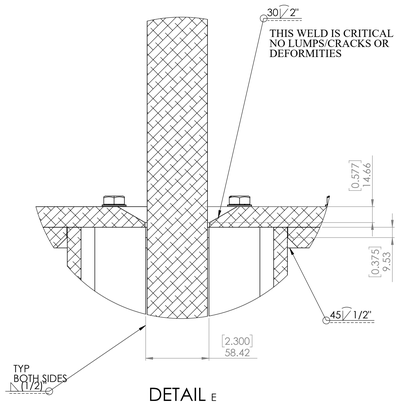

DETAIL E
SCALE 1 : 2

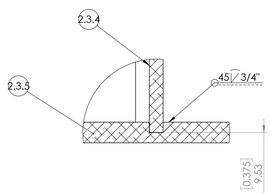

DETAIL D
SCALE 1 : 2

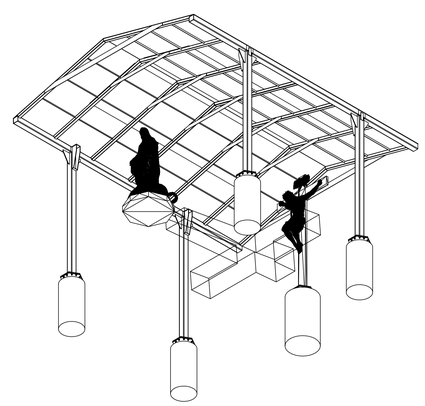

GEORGIA REGISTERED No. PE052322 PROFESSIONAL ENGINEER DANIEL WIDHALM

31 Jan 2026

UNLESS OTHERWISE SPECIFIED: TOLERANCES: (+/-) .ZRO TOLERANCES: (+/-) ±.5%	LOCATION: 2900 HWY 138 NE, CONYERS GA, 30013 USA DATUM: NAD83 (+/-) DATUM: 33.70 [D.M.S] N 84.00 [D.M.S] W MI: MECHANICAL, CLASS I SI: STRUCTURAL, CLASS I CI: CIVIL, CLASS I	DEBURR AND BREAK SHARP EDGES	DO NOT SCALE DRAWING / REVISION

	NAME	SIGNATURE	DATE
DRAWN			
CHK'D			
APPV'D			
MFG			
Q.A			

MATERIAL: SEE NOTES
WEIGHT:

TITLE: CREO DESIGNS
HOLY HILL ASM
CROSS W/CORPSE
MIRACULUS MEDAL
ROOF

DWG NO: M1-S1-C1-001-0000 A0
SCALE:1:50 SHEET 1 OF 3